FC7785W

Dual-band (Low/High Band)CDMA 1x/EVDO Rev.A Diversity Transceiver

DESCRIPTION

FC7785W is a dual-band CDMA transceiver with receiver diversity FCI's zipRF™ family. The FC7785W uses the same die with FC7785 with different package type. The FC7785W covers BC0, BC1, BC4, BC10, and BC14 band class. It is a highly integrated chip working with a single power supply. Because zero-IF architecture is used for FC7785W, additional components such as bulky IF SAW filters and other IF matching components are no longer required. FC7785W is featured to operate in the high data rate EVDO. Three-wired serial-to-parallel interface (SPI) protocol enables FC7785W to operate in the various modes. FC7785W contains complete dual-band receiver's main and diversity path such as LNA, down-conversion mixer, channel selection filter (CSF), Rx VCO, Rx PLL, and LO distribution block. FC7785W also contains complete dual-band transmitter path such as baseband amplifier, up-converter, RF variable-gain block, drive amplifier, Tx VCO, Tx PLL, and LO distribution block. FC7785W is optimized to have high SNR in 1x and EVDO Rev.A receive and transmit mode. FC7785W is available in 4.87 x 4.79 mm WLCSP package. The max. height of the package is 0.65mm.

APPLICATIONS

- Dual-band CDMA 1x/EVDO Rev.A diversity mobile phone or data card.

REVISION HISTORY

- **Preliminary** version release: Jan, 20, 2012
- **Preliminary** version release: Apr, 10, 2012
- **Preliminary** version release: Apr, 08, 2013

FEATURES

- Single-chip dual-band (Low-band and High-band) receiver diversity transceiver without need of external LNA
- FC7785W covers band class of BC0, BC1, BC4, BC10, and BC14.
- Low noise and highly linear LNA, mixer, and CSF for Low-band/High-band CDMA
- Low noise, highly linear, wide dynamic range transmitter with baseband amplifier, up-converter, drive amplifier
- Automatic DC-offset calibration, filter calibration, VCO calibration
- Fully integrated low phase noise Rx, Tx, and Fractional-N PLL with fine frequency resolution
- Greater than 85-dB transmit power control
- Support 3-wired SPI protocol
- WLCSP package with dimension of 4.87 x 4.79 mm with max. height of 0.65mm.

BLOCK DIAGRAM

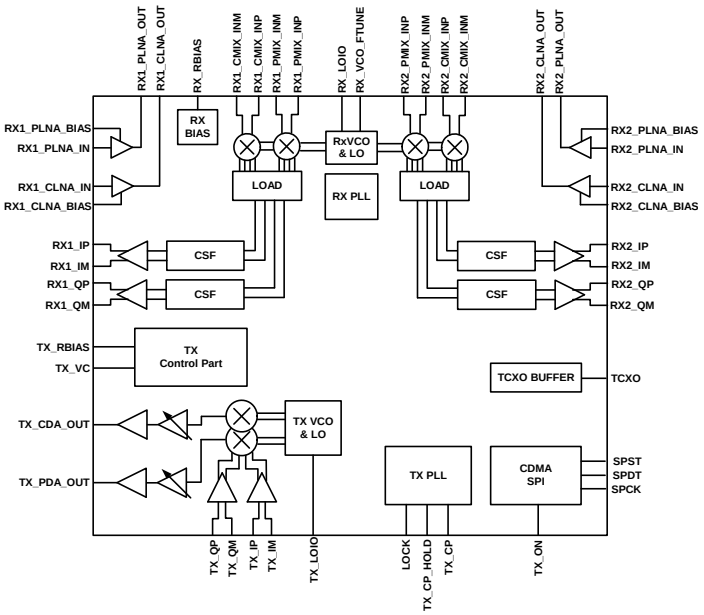

For latest specifications, technical questions and additional product information, visit website or e-mail

FCI Inc.
11th Floor, Kins Tower, 25-1
Jeongja-Dong, Bundang-Gu,
Sungnam City, Gyunggi-do,
463-811, KOREA

Website: http://www.fci.co.kr
E-mail: info@fci.co.kr
Phone: 82-31-711-6444
Fax: 82-31-711-0313